Schemi di collegamento
LEONARDO Off-Grid GE
Wiring Diagrams

LEONARDO Off-Grid GE

Schema di collegamento base solo per 1kW/1500/24

Only for 1kW/1500/24 Basic Wiring Diagram

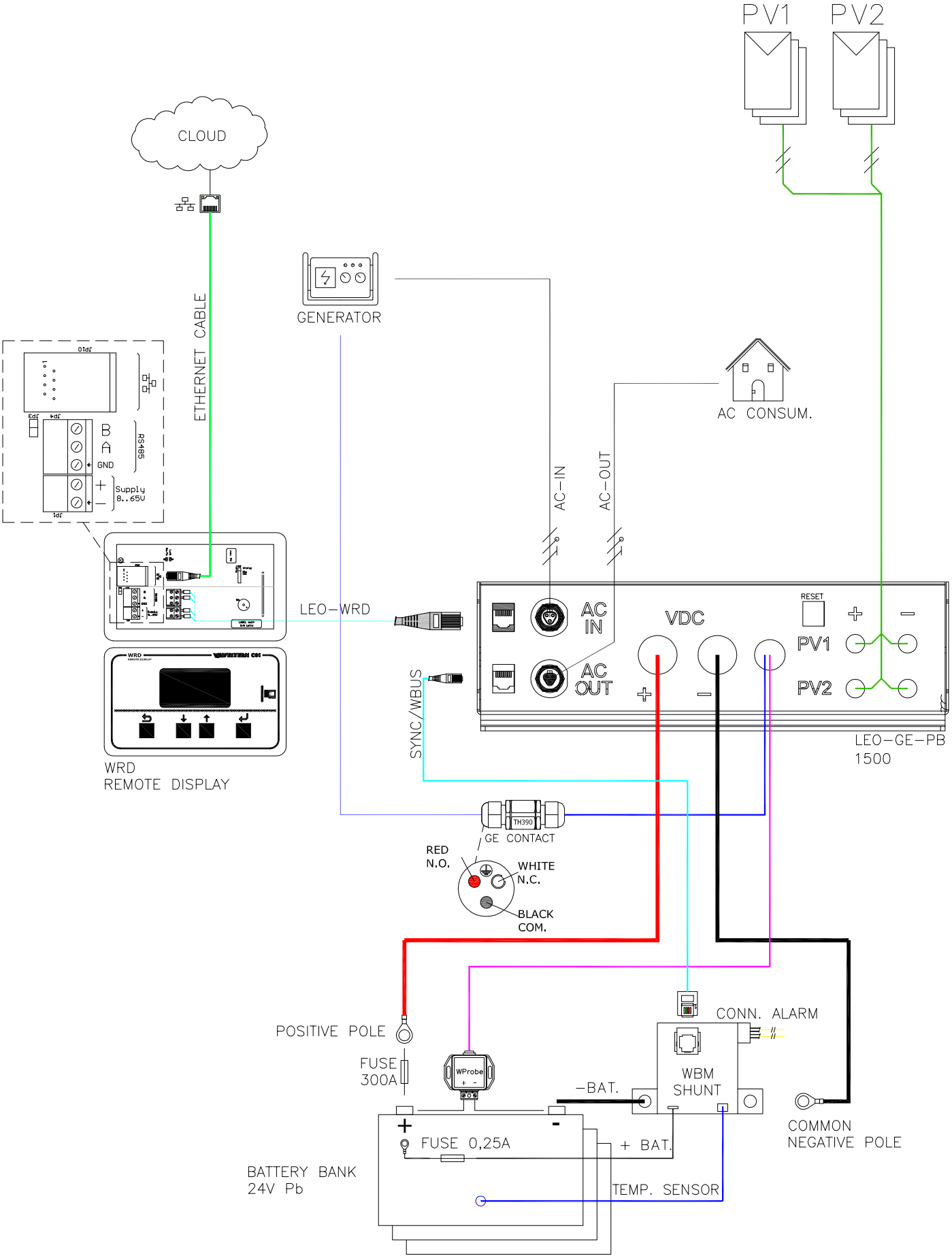

LEONARDO Off-Grid GE

Schema di collegamento base per Leonardo Off-Grid

Leonardo Off-Grid Basic Wiring Diagram

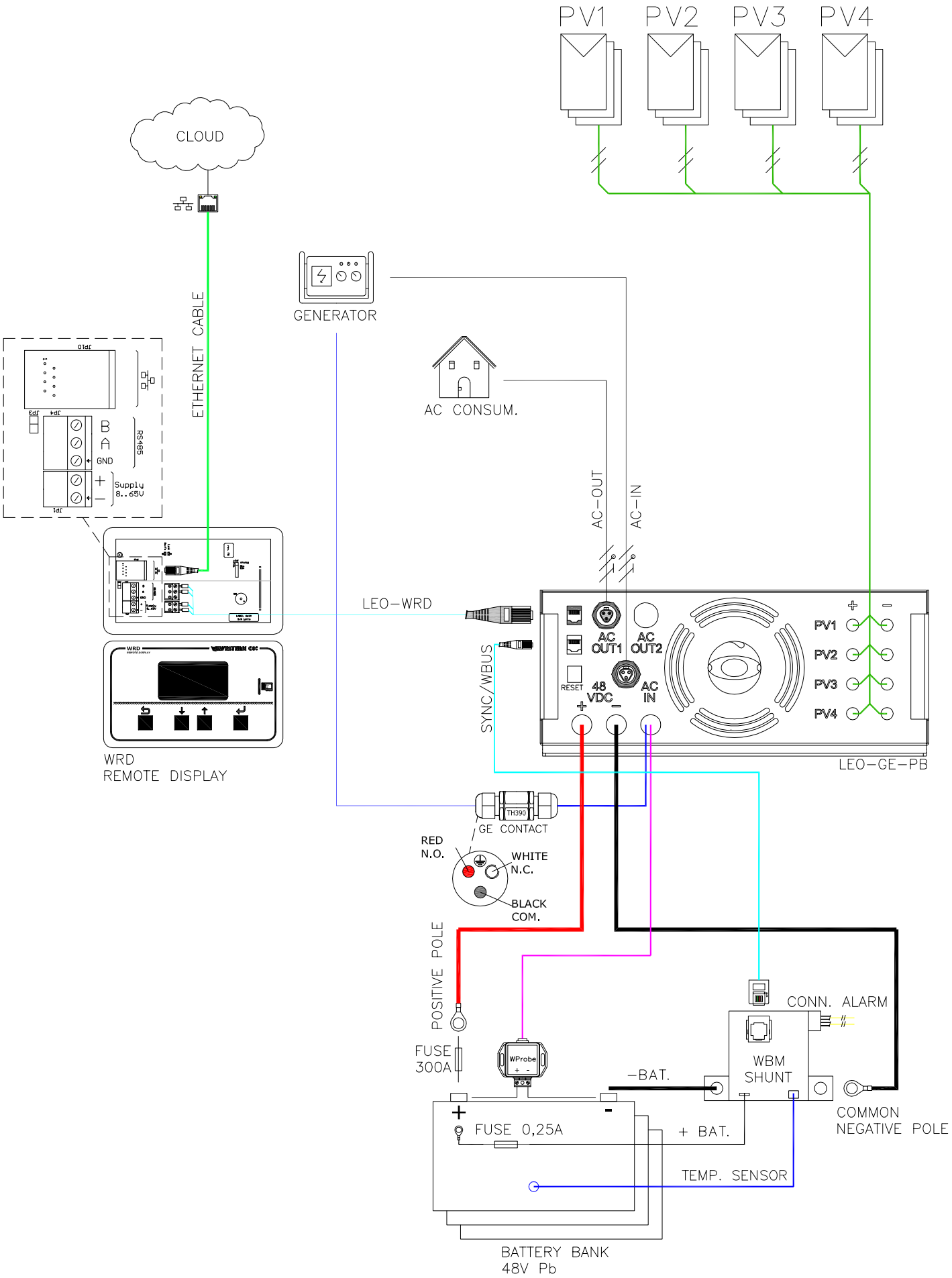

LEONARDO Off-Grid GE

Schema di collegamento con regolatori esterni WRM30+

Wiring Diagram with external WRM30+ charge controllers

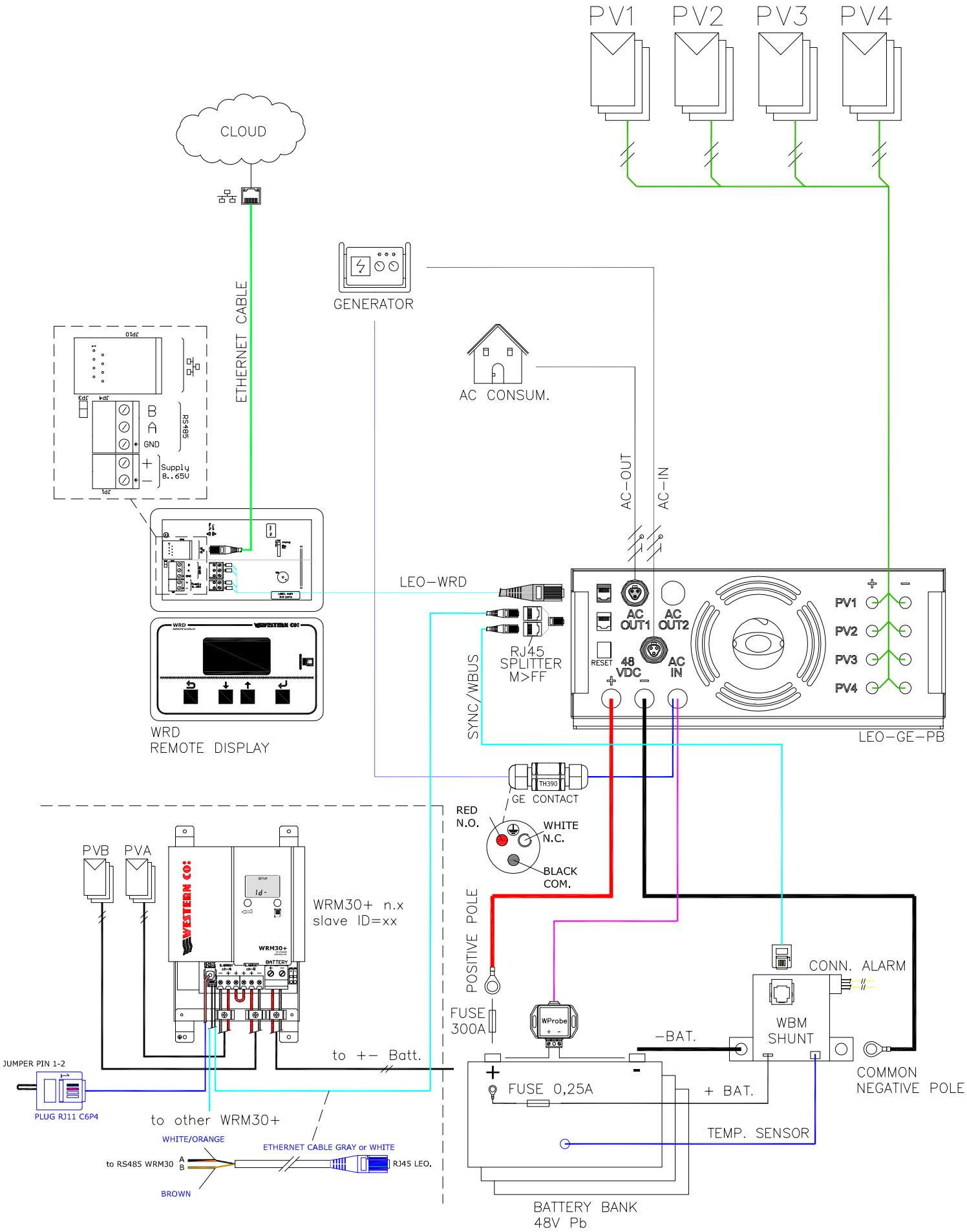

Leonardo Off-Grid GE

Schema di collegamento parallelo

Parallel Wiring Diagram

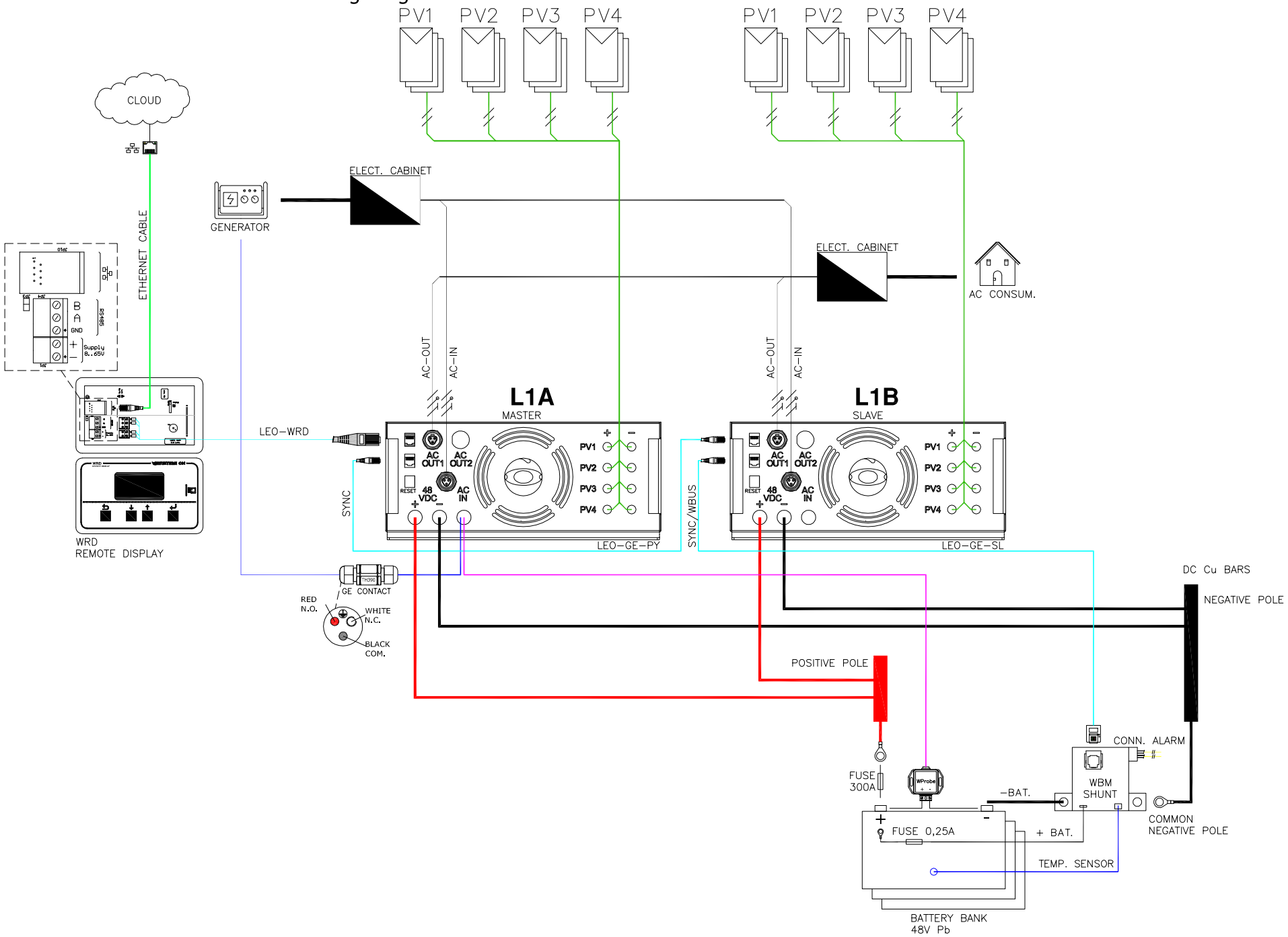

Leonardo Off-Grid GE

Schema di collegamento trifase
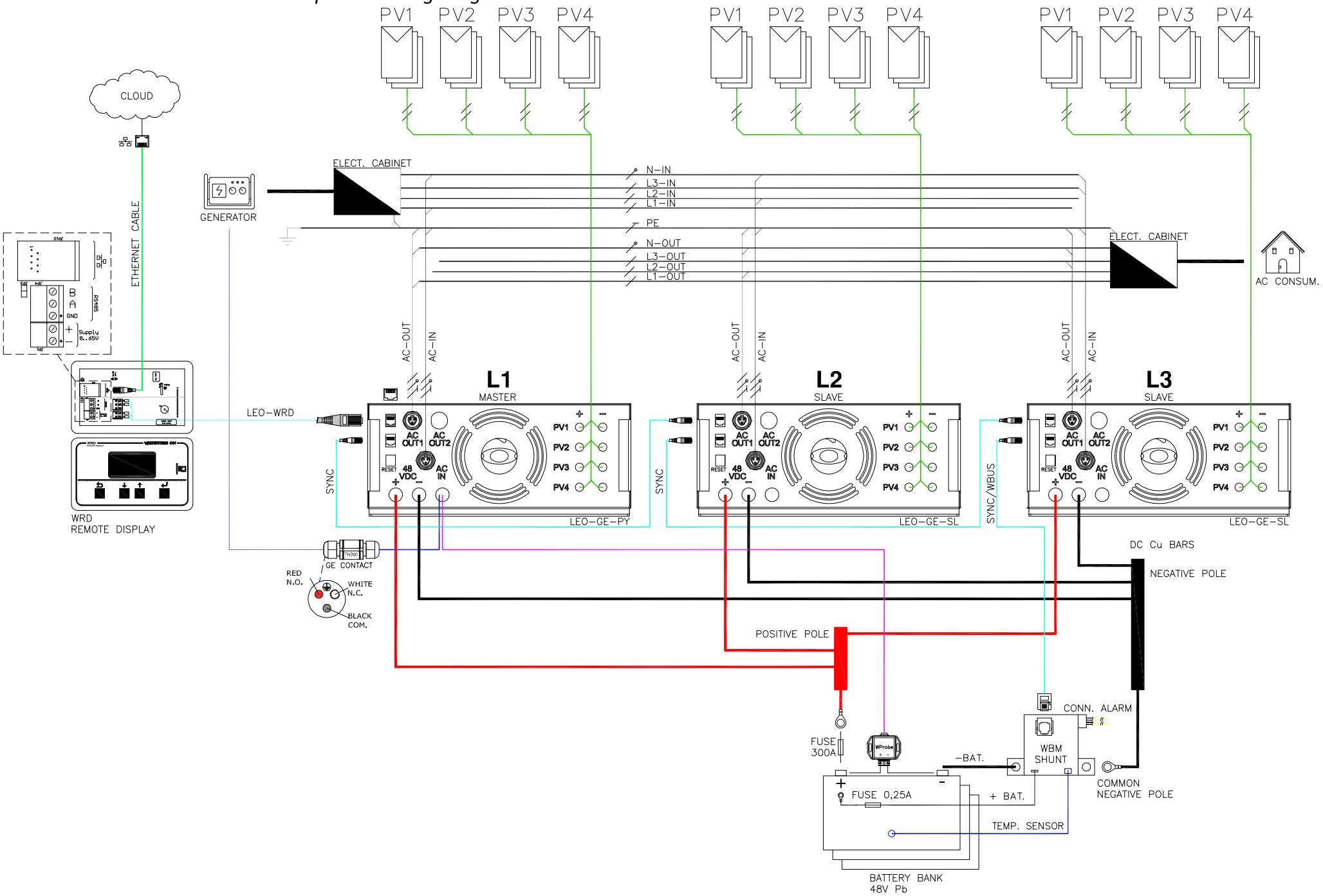
Three-phase Wiring Diagram